## POWER

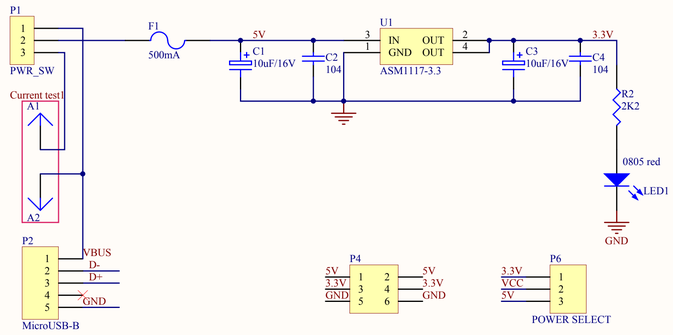


EPD drive is 3.3V

## USB

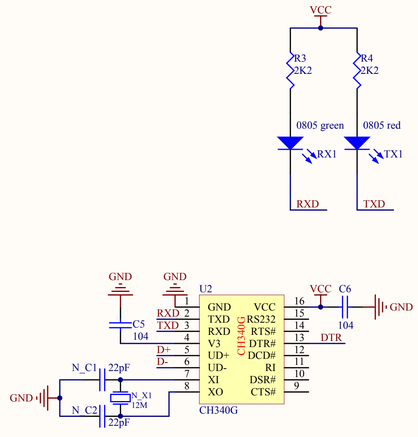


## MCU

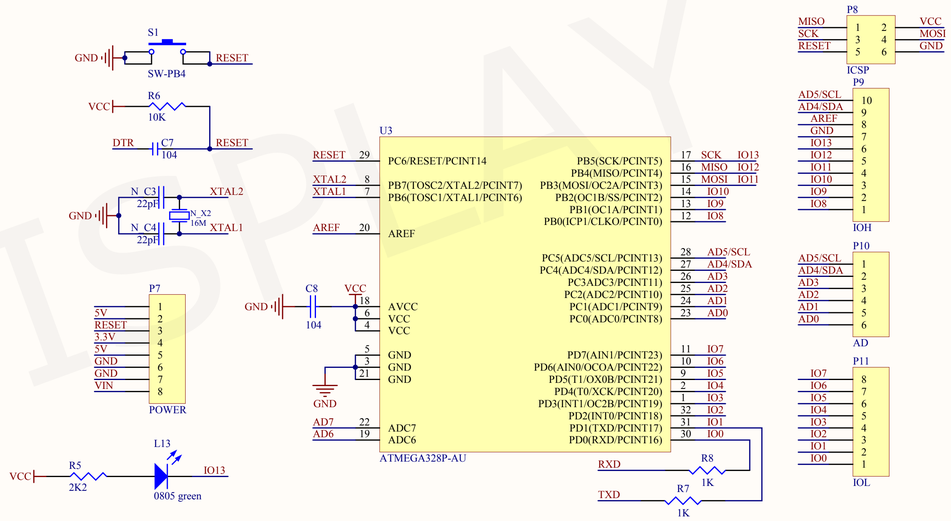


## INTERFACE

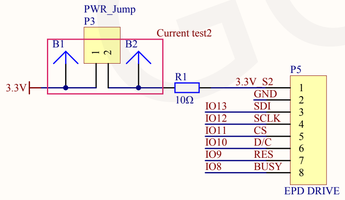


MARK1

MARK2

GOOD DISPLAY

| | | |
|---|---|---|
| Title | DALIAN GOOD DISPLAY CO., LTD. | |
| Size C | Number Arduino UNO for EPD | Revision 1.0 |
| Date: 2018/10/18 | | Sheet of |
| File: | | Drawn By: |